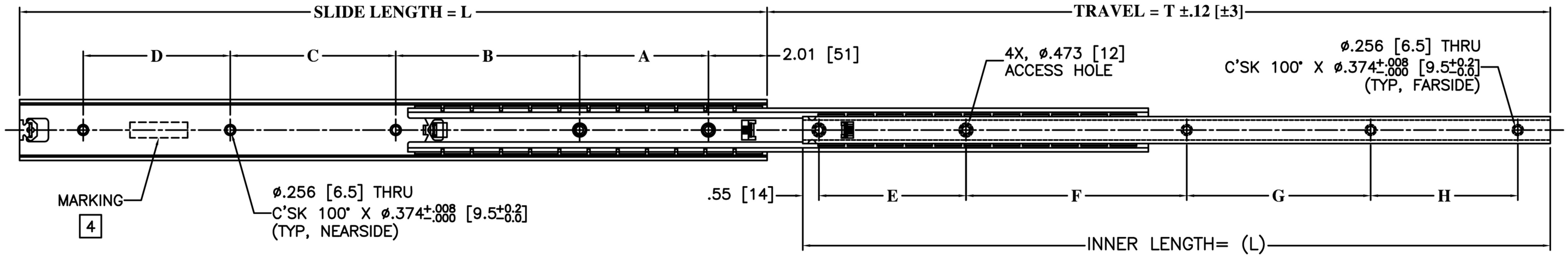

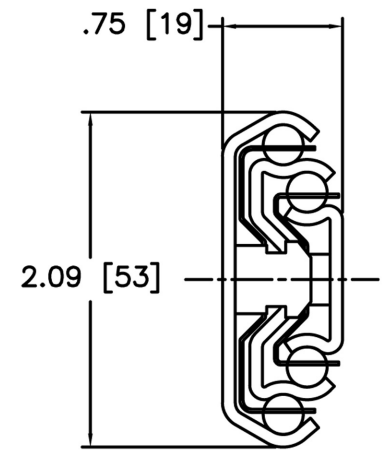

PART NO.	SLIDE LENGTH	SLIDE TRAVEL	MOUNTING HOLE PATTERN							
SERIES - LENGTH	DIM. L	DIM. T	OUTER CHANNEL A	OUTER CHANNEL B	OUTER CHANNEL C	OUTER CHANNEL D	INNER CHANNEL E	INNER CHANNEL F	INNER CHANNEL G	INNER CHANNEL H
477-SS-10	9.84 [250]	8.98 [228]	3.150 [80]	2.520 [64]	-	-	3.780 [96]	5.039 [128]	-	-
477-SS-12	11.81 [300]	13.27 [337]	4.409 [112]	3.150 [80]	-	-	5.039 [128]	5.039 [128]	-	-
477-SS-14	13.78 [350]	15.20 [386]	5.669 [144]	3.780 [96]	-	-	6.299 [160]	6.299 [160]	-	-
477-SS-16	15.75 [400]	17.13 [435]	5.669 [144]	3.150 [80]	3.150 [80]	-	3.780 [96]	3.780 [96]	6.299 [160]	-
477-SS-18	17.72 [450]	19.06 [484]	3.150 [80]	7.559 [192]	3.150 [80]	-	5.039 [128]	6.299 [160]	5.039 [128]	-
477-SS-20	19.69 [500]	21.02 [534]	4.409 [112]	6.299 [160]	4.409 [112]	-	6.299 [160]	6.299 [160]	5.039 [128]	-
477-SS-22	21.65 [550]	22.95 [583]	4.409 [112]	6.929 [176]	6.299 [160]	-	7.559 [192]	5.039 [128]	7.559 [192]	-
477-SS-24	23.62 [600]	24.88 [632]	4.409 [112]	8.819 [224]	6.299 [160]	-	8.189 [208]	5.039 [128]	8.189 [208]	-
477-SS-26	25.59 [650]	26.81 [681]	4.409 [112]	6.299 [160]	5.669 [144]	5.039 [128]	5.039 [128]	7.559 [192]	6.299 [160]	5.039 [128]
477-SS-28	27.56 [700]	28.74 [730]	5.669 [144]	6.299 [160]	5.669 [144]	5.669 [144]	5.039 [128]	8.189 [208]	8.189 [208]	5.039 [128]
477-SS-30	29.53 [750]	30.71 [780]	6.929 [176]	6.299 [160]	6.299 [160]	5.984 [152]	7.559 [192]	6.299 [160]	7.008 [178]	7.559 [192]
477-SS-32	31.50 [800]	32.64 [829]	7.559 [192]	7.559 [192]	7.559 [192]	4.409 [112]	8.819 [224]	6.299 [160]	6.457 [164]	8.819 [224]
477-SS-34	33.46 [850]	34.57 [878]	7.559 [192]	7.559 [192]	7.559 [192]	5.669 [144]	8.819 [224]	7.559 [192]	6.929 [176]	8.819 [224]
477-SS-36	35.43 [900]	36.50 [927]	7.559 [192]	7.559 [192]	7.559 [192]	6.929 [176]	8.819 [224]	8.819 [224]	6.929 [176]	8.819 [224]
477-SS-38	37.40 [950]	38.43 [976]	7.559 [192]	7.559 [192]	7.559 [192]	8.189 [208]	8.819 [224]	8.819 [224]	8.819 [224]	8.819 [224]
477-SS-40	39.37 [1000]	40.39 [1026]	7.559 [192]	10.079 [256]	10.079 [256]	7.559 [192]	8.819 [224]	10.079 [256]	10.079 [256]	8.819 [224]

7. USE 1/4 X 100° FLAT HEAD MACHINE SCREWS FOR MOUNTING THROUGH THE SLIDE MEMBERS
6. HOLES OTHER THAN THOSE SHOWN MAY BE IN SLIDE
5. SLIDE IS PROVIDED WITH A DETENT IN CLOSED POSITION.
4. MARK JONATHAN NAME & PART NUMBER:
   JONATHAN
   477-SS-XX (XX=LENGTH OF SLIDE)
   WW/YY (DATE CODE: WW=WEEK; YY=YEAR)
3. THIS SLIDE IS SYMMETRICAL, MAY BE USED AS LEFT OR RIGHT HAND MOUNTING UNIT.
2. LUBRICATION: EXTREME PRESSURE, HI-LOW TEMPERATURE POLYMER GREASE.
1. MATERIAL: STAINLESS STEEL TYPE 300.

JONATHAN® Engineered Solutions

Irvine Technology Center
410 Exchange, Suite 200
Irvine, CA 92602
Tel. (714) 665-4400
Fax: (714) 368-7002
Website: www.jonathanengr.com
Engineer - Production - Integration/ Subassembly - Logistics
United States - Mexico - China - Taiwan

TOLERANCES UNLESS OTHERWISE NOTED				PART NUMBER :	DESCRIPTION :
.XX	.XXX	ANGLE	HOLES	477-SS	STAINLESS STEEL SERIES 477 LOAD RATING: 220 LBS
± .03	± .010	± 2°	± .005	DATE : 1/11	
SHEET 1 OF 1					

COPYRIGHT © 2011 JONATHAN ENGINEERED SOLUTIONS