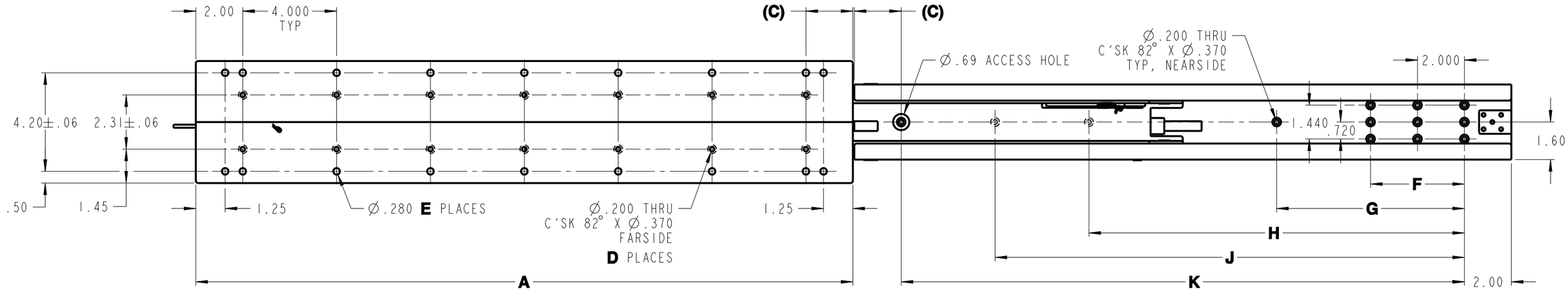

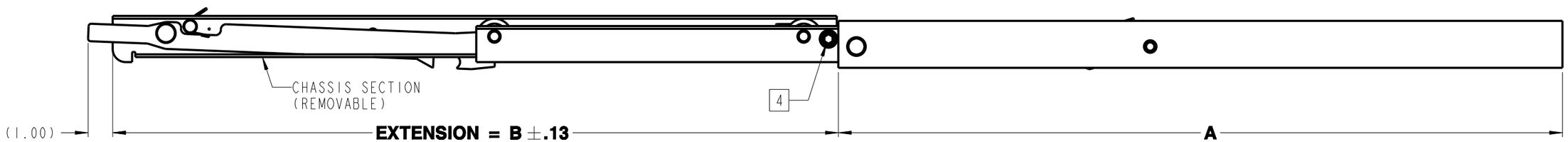

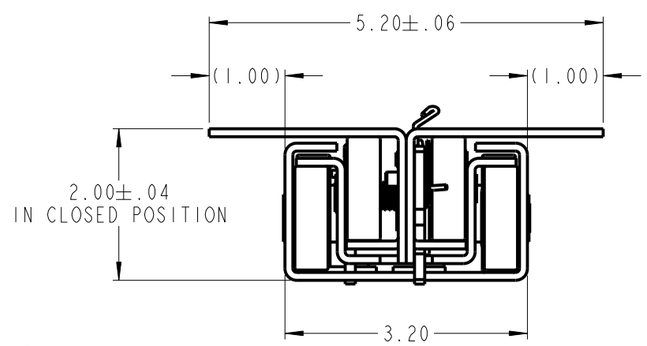

END VIEW

PART NO.	A	B	C	D	E	F	G	H	J	K	LOAD RATING
9000LLC-12	12.00	12.06	2.00	6	10	-	-	-	-	8.000	400 lbs
9000LLC-14	14.00	14.06	4.00	6	10	4.000	-	-	-	8.000	335 lbs
9000LLC-16	16.00	16.06	2.00	8	12	4.000	-	-	-	12.000	285 lbs
9000LLC-18	18.00	18.06	4.00	8	12	4.000	-	-	-	12.000	250 lbs
9000LLC-20	20.00	20.06	2.00	10	14	4.000	-	-	12.000	16.000	220 lbs
9000LLC-22	22.00	22.06	4.00	10	14	4.000	8.000	-	12.000	16.000	200 lbs
9000LLC-24	24.00	24.06	2.00	12	16	4.000	8.000	-	16.000	20.000	180 lbs
9000LLC-26	26.00	26.06	4.00	12	16	4.000	8.000	-	16.000	20.000	165 lbs
9000LLC-28	28.00	28.06	2.00	14	18	4.000	8.000	16.000	20.000	24.000	155 lbs

6. OPTIONAL FINISH ORDER INFORMATION:

   9000LLC-XX-B FOR BLACK COATING
   PASS 1,000 HOURS SALT SPRAY TEST PER ASTM B117.

5. HOLES OTHER THAN SHOWN MAY BE IN THE SLIDE MEMBERS AT JONATHAN OPTION.

4. REMOVAL OF CHASSIS SECTION FROM SLIDE IS OBTAINED BY REMOVING A SOCKET HEAD CAP SCREW (USE .31 HEX TOOL) ON THE RIGHT SIDE NEAR THE REAR OF THE CHASSIS SECTION.

3. SLIDE LOCKS IN OPEN AND CLOSED POSITION.

2. FINISH: COMMERCIAL CLEAR ZINC PLATING

1. MATERIAL: SLIDE MEMBERS ARE MADE FROM 12 GAGE (.105) STEEL.

JONATHAN® Engineered Solutions

Irvine Technology Center
410 Exchange, Suite 200
Irvine, CA 92602
Tel. (714) 665-4400
Fax: (714) 368-7002
Website: www.jonathanengr.com
Engineer - Production - Integration/ Subassembly - Logistics
United States - Mexico - China - Taiwan

TOLERANCES UNLESS OTHERWISE NOTED

.XX	.XXX	ANGLES	HOLES
± .03	± .010	± 2°	± .005

PART NUMBER : 9000LLC

DATE : 04/09/10

DESCRIPTION :

STEEL
SERIES 9000LLC
LOAD RATING : 155-400 LBS

SHEET 1 OF 1

COPYRIGHT © 2009 JONATHAN ENGINEERED SOLUTIONS