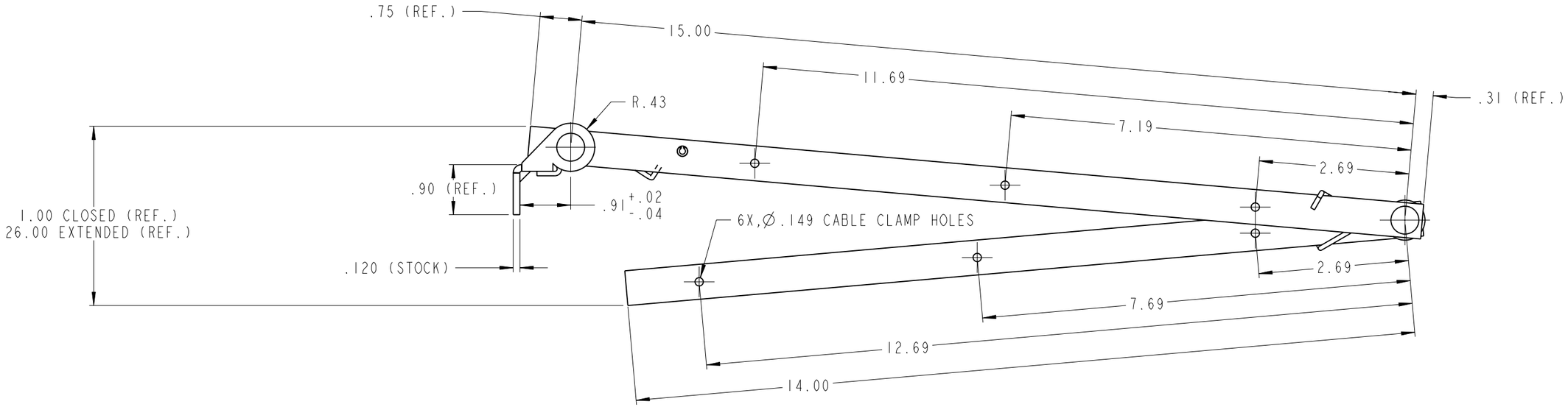

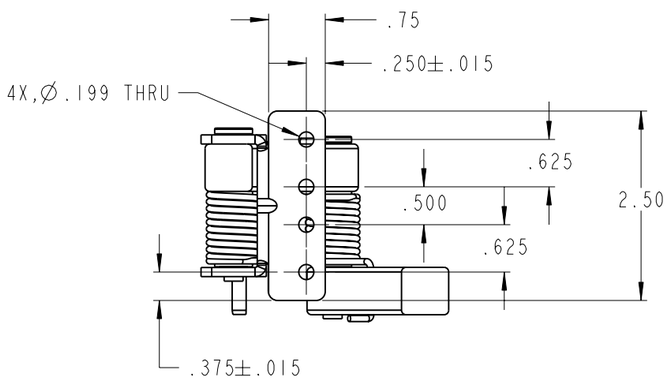

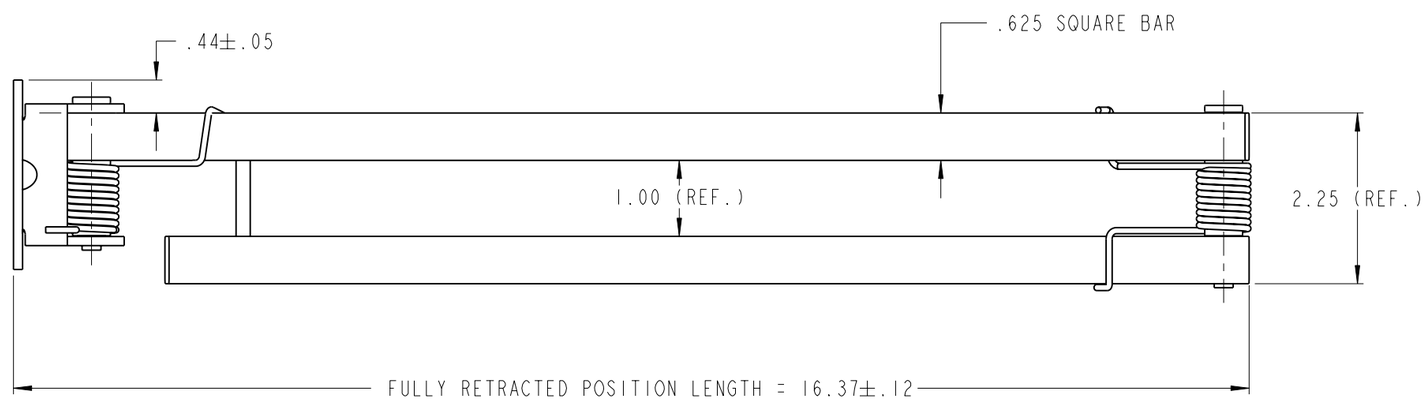

NOTES:

1. MATERIAL: CABLE RETRACTOR ARMS ARE FABRICATED FROM 6061-T6 ALUMINUM, COMPONENTS ARE FABRICATED FROM STAINLESS STEEL.
2. FINISH: ALUMINUM PARTS ARE ANODIZE PER MIL-A-8625 TYPE II, CLASS I, CRES PARTS ARE PASSIVATED PER SAE-AMS-2700.
3. FOR MIRROW IMAGE OF THE CABLE CARRIER SPECIFY CRS-30-A-R

JONATHAN® Engineered Solutions

Irvine Technology Center
410 Exchange, Suite 200
Irvine, CA 92602
Tel. (714) 665-4400
Fax: (714) 368-7002
Website: www.jonathanengr.com
Engineer - Production - Integration/ Subassembly - Logistics
United States - Mexico - China - Taiwan

TOLERANCES UNLESS OTHERWISE NOTED				PART NUMBER :	DESCRIPTION :
				CRS-30-A	CABLE RETRACTOR SYSTEM SERIES CRS-30-A
.XX	.XXX	ANGLES	HOLES	DATE :	
± .03	± .010	± 1°	± .005	11/09/12	
SHEET 1 OF 1					

COPYRIGHT © 2012 JONATHAN ENGINEERED SOLUTIONS