NOTES:

4. USE NUMBER #10 PAN OR BINDING HEAD SCREWS FOR MOUNTING THROUGH THE SLIDE MEMBERS.
3. FOR "EIA/RETMA" BRACKETS, SEE SEPARATE SECTION.
2. HOLES OTHER THAN SHOWN MAY BE IN THE SLIDE MEMBERS AT JONATHAN OPTION.
1. THE SLIDE IS SYMMETRICAL, IT MAY BE USED AS LEFT OR RIGHT HAND SLIDE.

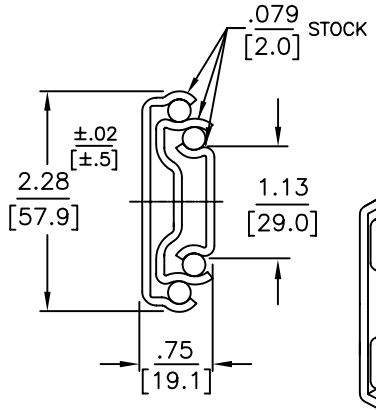

END VIEW

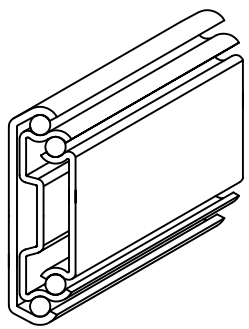

ISOMETRIC REPRESENTATION

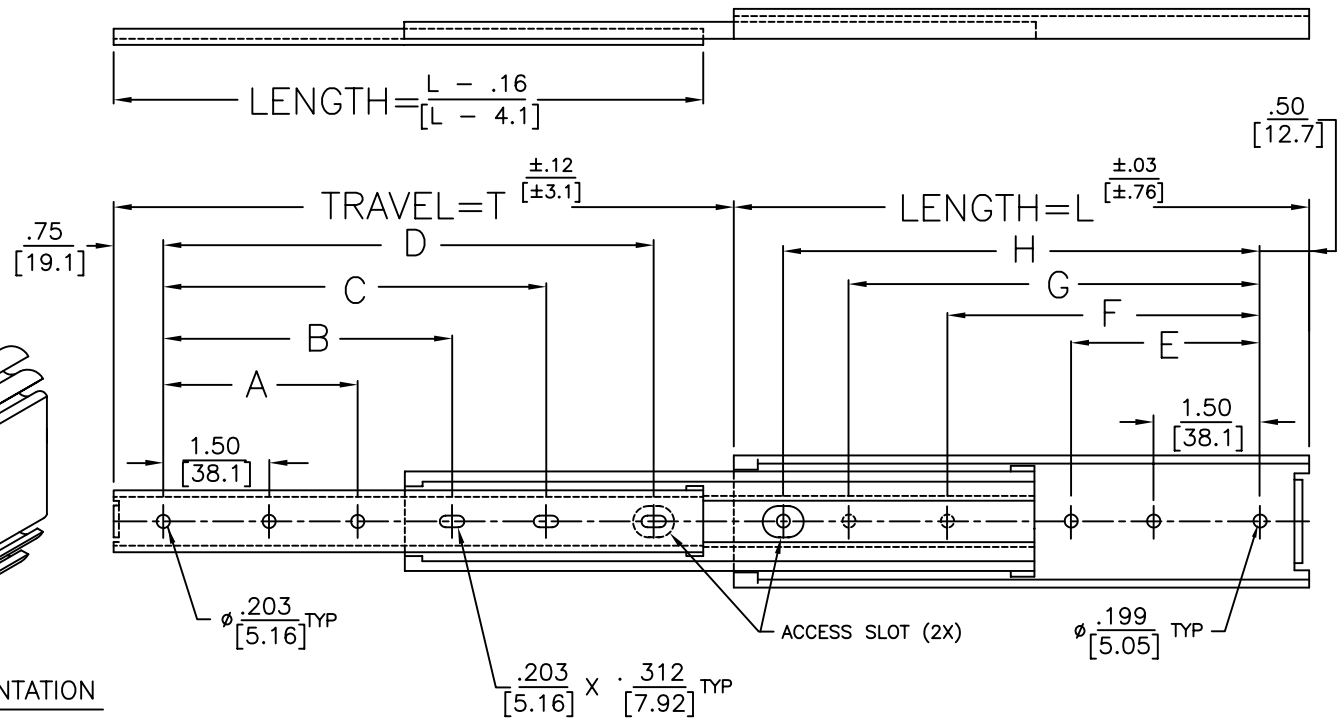

PART NO.	SLIDE LENGTH	SLIDE TRAVEL	MOUNTING HOLE PATTERN								LOAD RATING
SERIES — LENGTH	DIM. L	DIM. T	INNER CHANNEL A	B	C	D	OUTER CHANNEL E	F	G	H	PER PAIR
477–12	12 / 305	13 / 330	3.000 / 76.20	7.50 / 190.5	9.00 / 228.6	10.38 / 263.7	4.000 / 101.60	8.250 / 209.60	9.250 / 235.00	10.750 / 273.10	230 LBS / 104 KG
477–14	14 / 356	15 / 381	4.000 / 101.60	8.50 / 215.9	11.00 / 279.4	12.38 / 314.5	5.000 / 127.00	9.750 / 247.70	11.250 / 285.80	12.750 / 323.90	220 LBS / 100 KG
477–16	16 / 406	17 / 432	5.000 / 127.00	9.50 / 241.3	13.00 / 330.2	14.38 / 365.3	6.000 / 152.40	10.750 / 273.10	13.250 / 336.60	14.750 / 374.70	210 LBS / 95 KG
477–18	18 / 457	19 / 483	6.000 / 152.40	10.50 / 266.7	15.00 / 381.0	16.38 / 416.1	7.000 / 177.80	11.750 / 298.50	15.250 / 387.40	16.750 / 425.50	200 LBS / 91 KG
477–20	20 / 508	21 / 533	7.000 / 177.80	11.50 / 292.1	17.00 / 431.8	18.38 / 466.9	8.000 / 203.20	12.750 / 323.90	17.250 / 438.20	18.750 / 476.30	193 LBS / 88 KG
477–22	22 / 559	23 / 584	8.000 / 203.20	12.50 / 317.5	19.00 / 482.6	20.38 / 517.7	9.000 / 228.60	13.750 / 349.30	19.250 / 489.00	20.750 / 527.10	180 LBS / 82 KG
477–24	24 / 610	25 / 635	9.000 / 228.60	13.50 / 342.9	21.00 / 533.4	22.38 / 568.5	10.000 / 254.00	14.750 / 374.70	21.250 / 539.80	22.750 / 577.90	170 LBS / 77 KG
477–26	26 / 660	27 / 686	10.000 / 254.00	14.50 / 368.3	23.00 / 584.2	24.38 / 619.3	11.000 / 279.40	15.750 / 400.10	23.250 / 590.60	24.750 / 628.70	160 LBS / 73 KG
477–28	28 / 711	29 / 737	11.000 / 279.40	15.50 / 393.7	25.00 / 635.0	26.38 / 670.1	12.000 / 304.80	16.750 / 425.50	25.250 / 641.40	26.750 / 679.50	150 LBS / 68 KG
477–30	30 / 762	31 / 787	12.000 / 304.80	16.50 / 419.1	27.00 / 685.8	28.38 / 720.9	13.000 / 330.20	17.750 / 450.90	27.250 / 692.20	28.750 / 730.30	140 LBS / 64 KG

Irvine Technology Center
410 Exchange, Suite 200
Irvine, CA 92602
Tel: (714) 665–4400
Website: www.JonathanEngr.com
Engineering • Production • Integration/Subassembly • Logistics
United States • Mexico • China • Taiwan

DIMENSIONS SHOWN AS: IN. / [MM] TOLERANCE UNLESS OTHERWISE NOTED	
.XX / .X	±.020 / [±.5]
.XXX / .XX	±.010 / [±.25]
ANGLES	±1°

PART NO. 477

DATE: 6/04

DESCRIPTION:

STEEL
SERIES 477
LOAD RATING 140–230 LBS / 64–104 KG

COPYRIGHT © 2004 JONATHAN ENGINEERED SOLUTIONS