REVISION CONTROL			
REV.	DESCRIPTION	BY	DATE
-	INITIAL RELEASE	AV	04/15/09

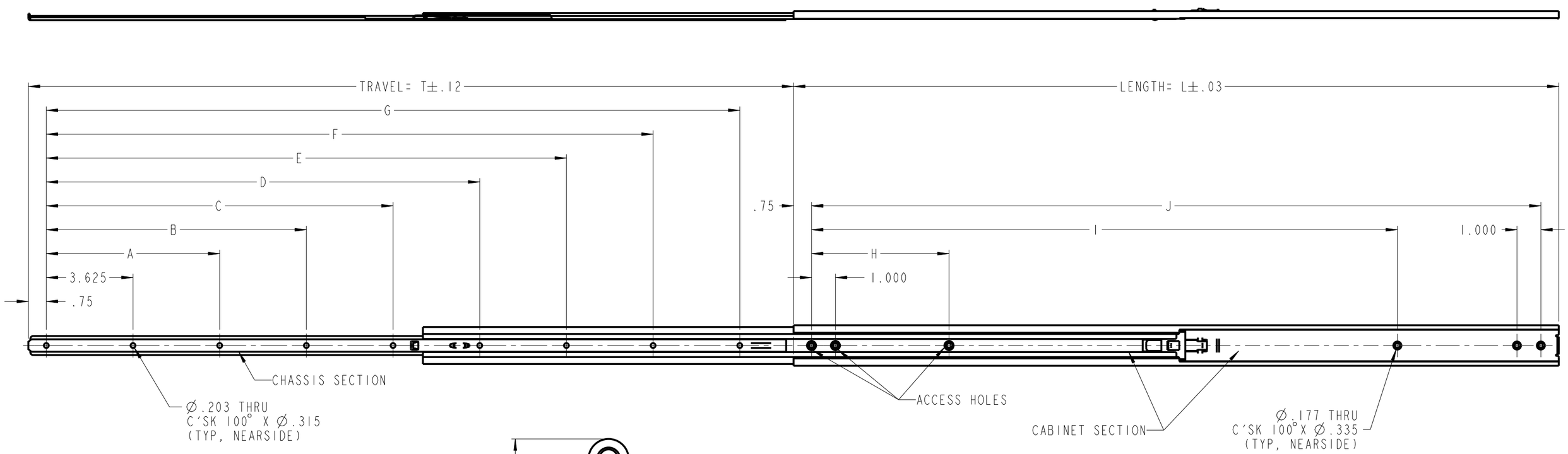

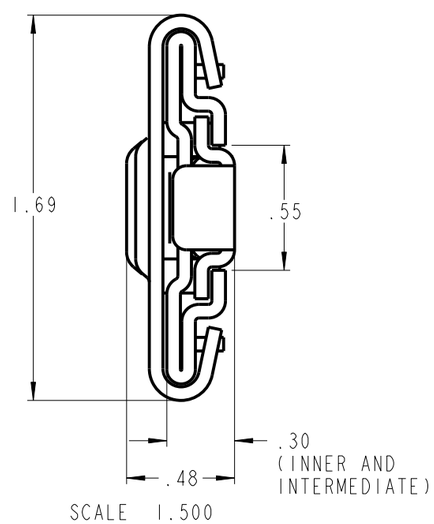

6. SLIDE IS SYMMETRICAL. MAY BE USED AS LEFT OR RIGHT HAND SLIDE.

5. HOLES OTHER THAN SHOWN MAY BE IN THE SLIDE MEMBERS AT JONATHAN OPTION

4. SLIDE LOCKS IN OPEN POSITION AND IS PROVIDED WITH QUICK DISCONNECT OF CHASSIS SECTION

3. USE #8-32 PAN HEAD SCREWS FOR MOUNTING THRU CHASSIS SLIDE MEMBER. USE 8-32 FLAT HEAD FOR MOUNTING THRU CABINET SLIDE MEMBER.

2. FINISH: CRS CHANNELS ZINC PLATE PER ROHS. SS CHANNELS PASSIVATE PER QQ-P-35

1. MATERIAL: CRS CHANNELS .060 THK PER ASTM 366. SS CHANNELS TYPE 300 SS

PART NUMBER		SLIDE LENGTH	SLIDE TRAVEL	CHASSIS SECTION							CABINET SECTION		
STEEL ZINC (ROHS)	STAINLESS STEEL PASSIVATE QQ-P-35	L	T	A	B	C	D	E	F	G	H	I	J
510QD-10	510QD-SS-10	10.00	10.00	7.250	-	-	-	-	-	-	-	-	8.500
510QD-12	510QD-SS-12	12.00	12.00	7.250	-	-	-	-	-	-	-	-	10.500
510QD-14	510QD-SS-14	14.00	14.00	-	10.875	-	-	-	-	-	-	-	12.500
510QD-16	510QD-SS-16	16.00	16.00	-	10.875	-	-	-	-	-	-	-	14.500
510QD-18	510QD-SS-18	18.00	18.00	7.250	10.875	14.500	-	-	-	-	5.750	10.500	16.500
510QD-20	510QD-SS-20	20.00	20.00	7.250	-	14.500	-	-	-	-	5.750	12.500	18.500
510QD-22	510QD-SS-22	22.00	22.00	7.250	-	14.500	10.875	-	-	-	5.750	14.500	20.500
510QD-24	510QD-SS-24	24.00	24.00	7.250	10.875	14.500	10.875	-	-	-	5.750	16.500	22.500
510QD-26	510QD-SS-26	26.00	26.00	7.250	10.875	14.500	10.875	21.750	-	-	5.750	18.500	24.500
510QD-28	510QD-SS-28	28.00	28.00	7.250	10.875	-	10.875	21.750	-	-	5.750	20.500	26.500
510QD-30	510QD-SS-30	30.00	30.00	7.250	10.875	-	18.125	21.750	25.375	-	5.750	22.500	28.500
510QD-32	510QD-SS-32	32.00	32.00	7.250	10.875	14.500	18.125	21.750	25.375	29.00	5.750	24.500	30.500

PROPIETARY ITEM
These drawings contain information deemed PROPRIETARY to Jonathan Engineered Solutions and may not be copied in whole or in part without express written permission from Jonathan Engineered Solutions.

DATE ----------

CUSTOMER APPROVAL ----------

410 Exchange, Suite 200
Irvine, CA 92602-1309
Tel. (714) 665-4400
Fax: (714) 368-7002

VIEW PROJECTIONS

TOLERANCES UNLESS OTHERWISE NOTED: .XX ±.01 | .XXX ±.005 | ANGLES ±1° 00' | HOLES ±.005

SHEET 1 OF 1

CUST. NAME: JONATHAN

DWG. NO.: 510QD

REV.: -