NOTES:

1. SLIDE SHOWN TO BE USED AS LEFT HAND SLIDE. WHEN USED AS A RIGHT HAND SLIDE REAR LOCK WILL BE ON BOTTOM SIDE.
2. HOLES OTHER THAN SHOWN MAY BE IN THE SLIDE MEMBERS AT JONATHAN OPTION.
3. SLIDE PROVIDED WITH BRACKETS SHOWN. FOR EXTENDED BRACKET, SEE SEPARATE SECTION.
4. SLIDE LOCKS IN OPEN POSITION ONLY AND IS PROVIDED WITH QUICK DISCONNECT OF CHASSIS SECTION. DEPRESS BUTTON TO EITHER CLOSE SLIDE OR TO REMOVE CHASSIS SECTION.
5. THIS SET OF ROLLERS NOT SUPPLIED ON SLIDE 110QD-12-2.
6. CABINET SECTION PART NUMBER: 110QD/QDP-(LENGTH)-A2
7. CHASSIS SECTION PART NUMBER: 110QD-(LENGTH)-B
8. ORDERING INFORMATION: INDIVIDUAL SLIDE SECTIONS MAY BE PURCHASED AS DESCRIBED IN NOTES 6 AND 7. TO ORDER A COMPLETE SLIDE ASSEMBLY WHICH INCLUDES BOTH CHASSIS AND CABINET SECTIONS SPECIFY PART NUMBER: 110QD-(LENGTH)-2
9. SLIDE 110QD-18-2 THRU 110QD-24-2 PROVIDED WITH EXTRA SET OF ROLLERS NOT SHOWN ON THIS DRAWING.
10. THIS SLIDE MECHANISM IS DESIGNED FOR USE ON CHASSIS THAT HAVE FRONT PANELS. CONTACT JONATHAN IN THE EVENT THAT THE CHASSIS DOES NOT HAVE A FRONT PANEL.
11. ADJUSTMENT RANGE OF REAR BRACKET (SPO-440)
    UTILIZING TWO HOLES AT REAR (A) SLIDE LENGTH
    $\frac{-.25\ IN}{-6.4\ MM}$ TO $\frac{+2.00\ IN}{+50.8\ MM}$
    UTILIZING FOUR HOLES AT REAR (A & B) SLIDE
    LENGTH $\frac{-.25\ IN}{-6.4\ MM}$ TO $\frac{+1.25\ IN}{+31.8\ MM}$
12. USE NUMBER 10 PAN OR BINDING HEAD SCREWS FOR MOUNTING THRU THE INNER CHANNEL.

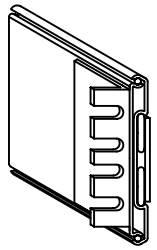

ISOMETRIC REPRESENTATION

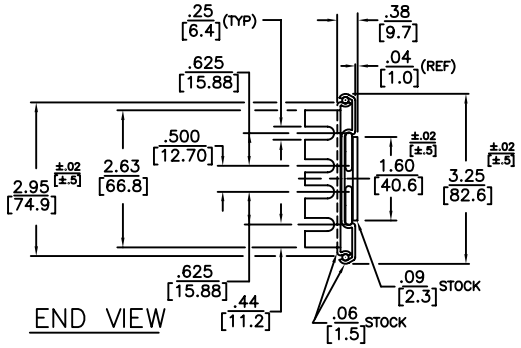

END VIEW

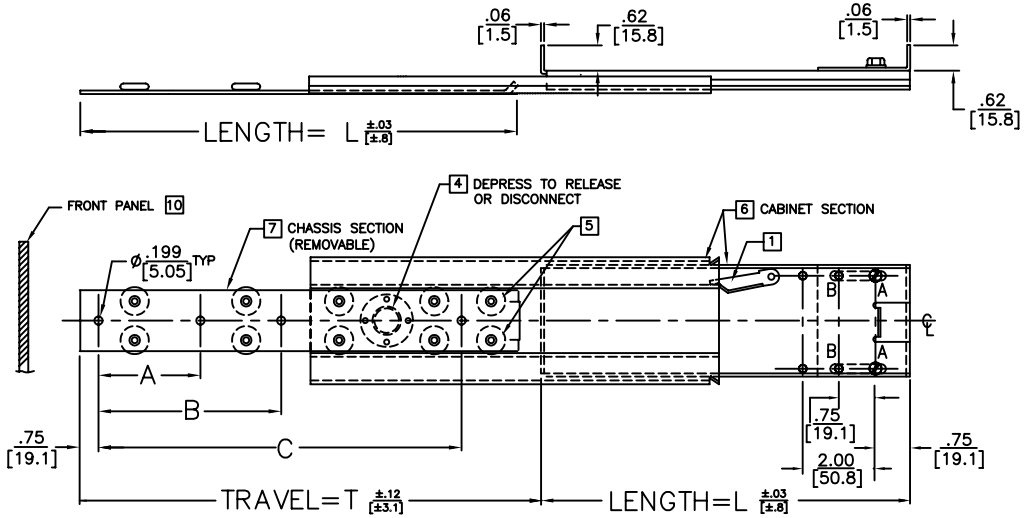

PART NO.	SLIDE LENGTH	SLIDE TRAVEL	MOUNTING HOLE PATTERN			LOAD RATING
SERIES – LENGTH	DIM. L	DIM. T	INNER CHANNEL A	B	C	PER PAIR
110QD-12-2	12 / 305	15 / 381	3.500 / 88.90	6.250 / 158.80	10.500 / 266.70	125 LBS / 57 KG
110QD-14-2	14 / 356	17 / 432	4.000 / 101.60	7.250 / 184.20	12.000 / 304.80	125 LBS / 57 KG
110QD-16-2	16 / 406	19 / 483	5.000 / 127.00	8.250 / 209.60	14.000 / 355.60	120 LBS / 55 KG
110QD-18-2	18 / 457	21 / 533	5.000 / 127.00	9.250 / 235.00	16.000 / 406.40	120 LBS / 55 KG
110QD-20-2	20 / 508	23 / 584	6.000 / 152.40	10.250 / 260.40	18.000 / 457.20	120 LBS / 55 KG
110QD-22-2	22 / 559	25 / 635	8.000 / 203.20	16.250 / 412.80	20.000 / 508.00	100 LBS / 45 KG
110QD-24-2	24 / 610	27 / 686	8.000 / 203.20	17.250 / 438.20	22.000 / 558.80	100 LBS / 46 KG

JONATHAN® Engineered Solutions

Irvine Technology Center
410 Exchange, Suite 200
Irvine, CA 92602
Tel: (714) 665-4400
Website: www.JonathanEngr.com
Engineering • Production • Integration/Subassembly • Logistics
United States • Mexico • China • Taiwan

DIMENSIONS SHOWN AS: IN. [MM]	TOLERANCE UNLESS OTHERWISE NOTED
.XX / .X	±.020 [±.5]
.XXX / .XX	±.010 [±.25]
ANGLES	±1°

PART NO. 110QD-2

DATE: 6/04

DESCRIPTION:
STEEL
SERIES 110QD-2
LOAD RATING: 100-125 LBS./ 46-57 KG.

COPYRIGHT © 2004 JONATHAN ENGINEERED SOLUTIONS