NOTES:

1. LEFT SLIDE AS SHOWN, RIGHT SLIDE OPPOSITE.
2. SLIDE LOCKS IN OPEN POSITION ONLY.
3. FOR "EIA/RETMA" BRACKETS. SEE SEPARATE SECTION.
4. SLIDE FEATURES QUICK DISCONNECT OF CHASSIS SECTION AND 90° UP AND DOWN PIVOT.

[5] CABINET SECTION OR CHASSIS SECTION MAY BE PURCHASED SEPARATELY AND ARE INTERCHANGEABLE. CONTACT JONATHAN FOR ORDERING INSTRUCTIONS.

[6] AMOUNT OF ROLLERS TO BE DETERMINED BY JONATHAN ENGINEERED SOLUTIONS

7. MOUNTING HOLE TOLERANCE: ±.005 [±.13]

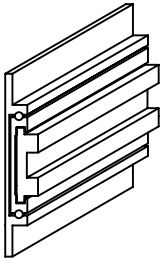

ISOMETRIC REPRESENTATION

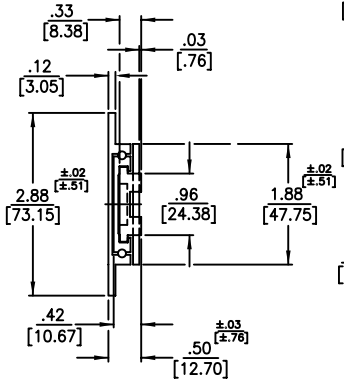

END VIEW

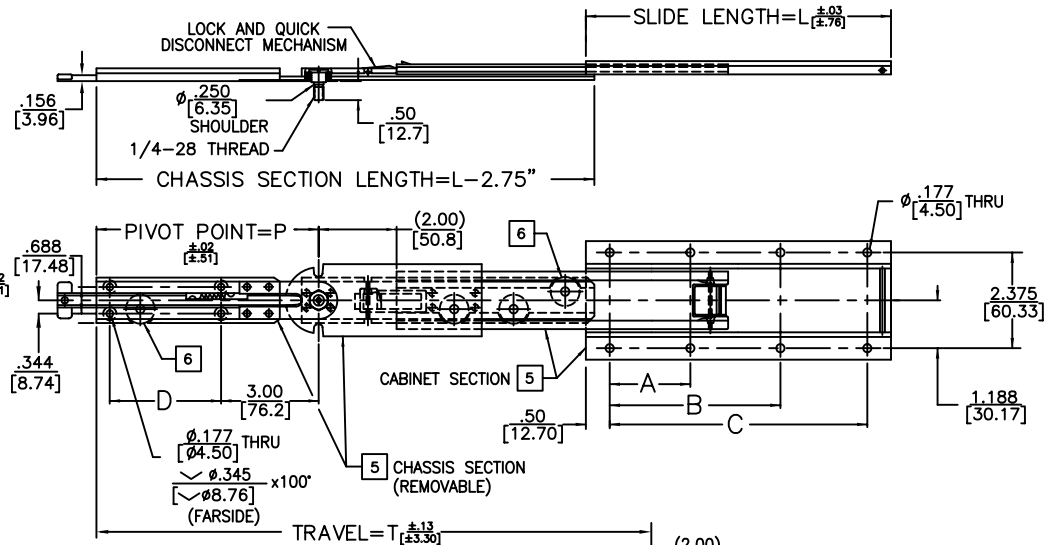

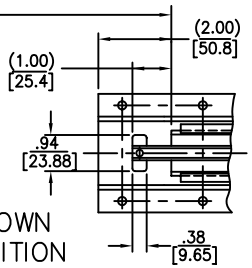

FRONT END SHOWN IN CLOSED POSITION

PART NO.	SLIDE LENGTH	SLIDE TRAVEL	PIVOT POINT	MOUNTING HOLE PATTERN				LOAD RATING
SERIES – LENGTH	DIM. L	DIM. T	DIM. P	OUTER MEMBER A	B	C	PIVOT PLATE D	PER PAIR
120QDP–14	14 / 355.6	15 / 381	5 / 127	4 / 101.6	9 / 228.6	13 / 330.2	1.25 / 31.75	100 LBS / 45 KG
120QDP–16	16 / 406.4	17 / 431.8	6 / 152.4	5 / 127	10 / 254	15 / 381	2.25 / 57.15	100 LBS / 45 KG
120QDP–18	18 / 457.2	19 / 482.6	7 / 177.8	6 / 152.4	11 / 279.4	17 / 431.8	3.25 / 82.55	95 LBS / 43 KG
120QDP–20	20 / 508	21 / 533.4	8 / 203.2	6 / 152.4	13 / 330.2	19 / 482.6	4.25 / 107.9	88 LBS / 39 KG
120QDP–22	22 / 558.8	23 / 584.2	9 / 228.6	7 / 177.8	14 / 355.6	21 / 533.4	5.25 / 133.4	84 LBS / 38 KG
120QDP–24	24 / 609.6	25 / 635	10 / 254	8 / 203.2	15 / 381	23 / 584.2	6.25 / 158.8	80 LBS / 36 KG
120QDP–26	26 / 660.4	27 / 685.8	11 / 279.4	8 / 203.2	17 / 431.8	25 / 635	7.25 / 184.2	77 LBS / 34 KG
120QDP–28	28 / 711.2	29 / 736.6	12 / 304.8	9 / 228.6	18 / 457.2	27 / 685.8	8.25 / 209.6	74 LBS / 33 KG
120QDP–30	30 / 762	31 / 787.4	13 / 330.2	10 / 254	19 / 482.6	29 / 736.6	9.25 / 234.9	70 LBS / 32 KG

JONATHAN® Engineered Solutions

Irvine Technology Center
410 Exchange, Suite 200
Irvine, CA 92602
Tel: (714) 665-4400
Website: www.JonathanEngr.com
Engineering • Production • Integration/Subassembly • Logistics
United States • Mexico • China • Taiwan

DIMENSIONS SHOWN AS: IN. [MM] TOLERANCE UNLESS OTHERWISE NOTED		PART NO.	DESCRIPTION:
.XX / .X	±.010 [±.3]	120QDP	ALUMINUM SERIES 120QDP LOAD RATING: 70–100 LBS./ 32–45 KG.
.XXX / .XX	±.005 [±.13]	DATE: 6/04	
ANGLES	±1°		

COPYRIGHT © 2004 JONATHAN ENGINEERED SOLUTIONS