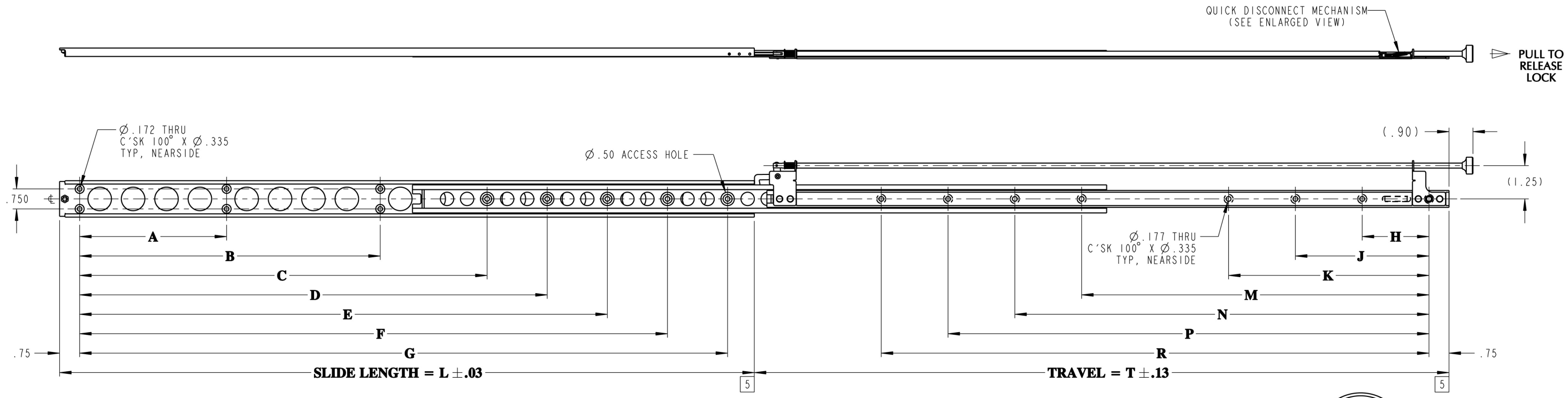

6. NUMBER OF LIGHTENING HOLES ON SLIDE TO BE DETERMINED BY JONATHAN ENGINEERED SOLUTIONS AND WILL VARY WITH SLIDE LENGTH.

5 THESE SURFACES ALIGN WHEN SLIDE IS IN CLOSED POSITION.

4. USE #8 X 100° FLAT HEAD MACHINE SCREWS FOR MOUNTING THRU SLIDE MEMBERS.

3. SLIDE IS PROVIDED WITH LOCK OPEN & CLOSED MECHANISM, AND QUICK DISCONNECT OF CHASSIS SECTION.

2. FINISH: CHANNELS ARE ANODIZED PER MIL-A-8625, TYPE II, CLASS I. CRES PARTS PASSIVATED PER SAE-AMS-QQ-P-35.

1. MATERIAL: CHANNELS ARE FABRICATED FROM HIGH STRENGTH ALUMINUM ALLOYS WITH TENSILE STRENGTH OF 35,000 PSI MIN. (PER ASTM B221). COMPONENT PARTS ARE 302 OR 303 CRES AND HIGH STRENGTH ALUMINUM. BALL BEARINGS ARE 440 CRES.

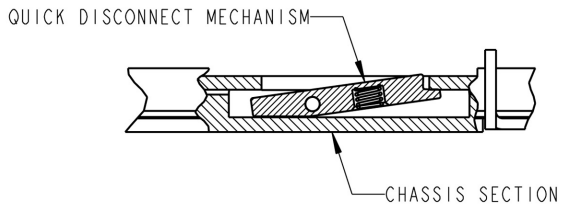

QUICK DISCONNECT MECHANISM

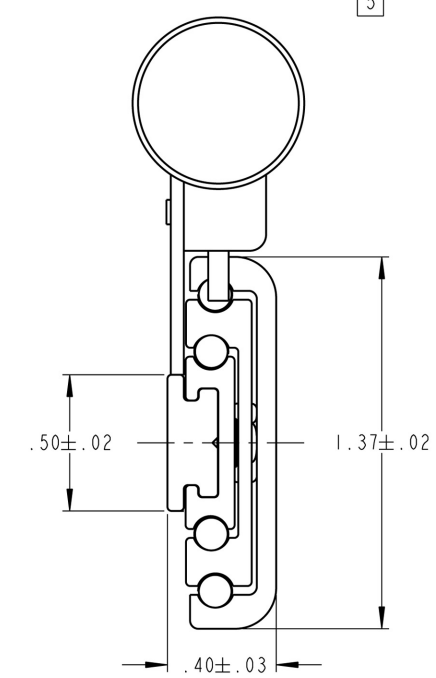

SERIES - LENGTH	SLIDE LENGTH	SLIDE TRAVEL	MOUNTING HOLE PATTERN														LOAD RATING	SLIDE WEIGHT
			CABINET SECTION							CHASSIS SECTION								
PART NO.	L	T	A	B	C	D	E	F	G	H	J	K	M	N	P	R	PER PAIR	
129HL-6	6.00	6.00	-	-	2.000	-	-	-	4.250	-	-	-	-	-	-	3.500	98 LBS	.276 LBS
129HL-7	7.00	7.00	-	-	3.000	-	-	-	5.250	2.500	-	-	-	-	-	4.500	98 LBS	.314 LBS
129HL-8	8.00	8.00	3.000	-	4.000	-	-	-	6.250	2.750	-	-	-	-	-	5.500	101 LBS	.356 LBS
129HL-9	9.00	9.00	3.000	-	5.000	-	-	-	7.250	3.250	-	-	-	-	-	6.500	101 LBS	.395 LBS
129HL-10	10.00	10.00	4.000	-	6.000	-	-	-	8.250	3.250	-	-	-	-	-	6.500	108 LBS	.434 LBS
129HL-11	11.00	11.00	4.000	-	7.000	-	-	-	9.250	2.500	-	-	6.000	-	-	8.500	108 LBS	.472 LBS
129HL-12	12.00	12.00	4.000	-	8.000	-	-	-	10.250	2.500	-	-	6.000	-	-	8.500	104 LBS	.511 LBS
129HL-13	13.00	13.00	5.500	-	9.000	-	-	-	11.250	2.500	-	-	6.000	-	-	8.500	104 LBS	.554 LBS
129HL-14	14.00	14.00	5.500	-	10.000	-	-	-	12.250	2.500	-	5.000	9.000	-	-	11.500	101 LBS	.592 LBS
129HL-15	15.00	15.00	5.500	-	11.000	-	-	-	13.250	2.500	-	5.000	9.000	-	-	11.500	101 LBS	.631 LBS
129HL-16	16.00	16.00	5.500	-	7.500	9.750	12.000	-	14.250	2.500	-	5.000	9.000	-	-	11.500	98 LBS	.674 LBS
129HL-17	17.00	17.00	5.500	-	8.500	10.750	13.000	-	15.250	2.500	-	5.000	9.000	-	-	11.500	98 LBS	.716 LBS
129HL-18	18.00	18.00	5.500	-	9.500	11.750	14.000	-	16.250	2.500	-	5.000	8.500	11.000	-	13.500	94 LBS	.755 LBS
129HL-19	19.00	19.00	5.500	-	10.500	12.750	15.000	-	17.250	2.500	-	5.000	8.500	11.000	-	13.500	94 LBS	.798 LBS
129HL-20	20.00	20.00	5.500	-	11.500	13.750	16.000	-	18.250	2.500	-	5.000	8.500	11.000	-	13.500	90 LBS	.836 LBS
129HL-21	21.00	21.00	5.500	-	12.500	14.750	17.000	-	19.250	2.500	5.000	7.500	11.500	14.000	-	16.500	90 LBS	.875 LBS
129HL-22	22.00	22.00	5.500	-	13.500	15.750	18.000	-	20.250	2.500	5.000	7.500	11.500	14.000	-	16.500	87 LBS	.914 LBS
129HL-23	23.00	23.00	5.500	-	12.250	14.500	16.750	19.000	21.250	2.500	5.000	7.500	11.000	13.500	16.000	18.500	87 LBS	.955 LBS
129HL-24	24.00	24.00	5.500	-	13.250	15.500	17.750	20.000	22.250	2.500	5.000	7.500	11.000	13.500	16.000	18.500	85 LBS	.995 LBS
129HL-25	25.00	25.00	5.500	11.250	14.250	16.500	18.750	21.000	23.250	2.500	5.000	7.500	13.000	15.500	18.000	20.500	85 LBS	1.04 LBS
129HL-26	26.00	26.00	5.500	11.250	15.250	17.500	19.750	22.000	24.250	2.500	5.000	7.500	13.000	15.500	18.000	20.500	80 LBS	1.08 LBS

JONATHAN® Engineered Solutions

Irvine Technology Center
410 Exchange, Suite 200
Irvine, CA 92602
Tel. (714) 665-4400
Fax: (714) 368-7002
Website: www.jonathanengr.com
Engineer - Production - Integration/ Subassembly - Logistics
United States - Mexico - China - Taiwan

TOLERANCES UNLESS OTHERWISE NOTED			
.XX	.XXX	ANGLES	HOLES
± .01	± .005	± 1°	± .005

SHEET 1 OF 1

PART NUMBER : 129HL

DATE : 1/11

DESCRIPTION :

ALUMINUM
SERIES 129HL
LOAD RATING : 80-98 LBS

COPYRIGHT © 2011 JONATHAN ENGINEERED SOLUTIONS