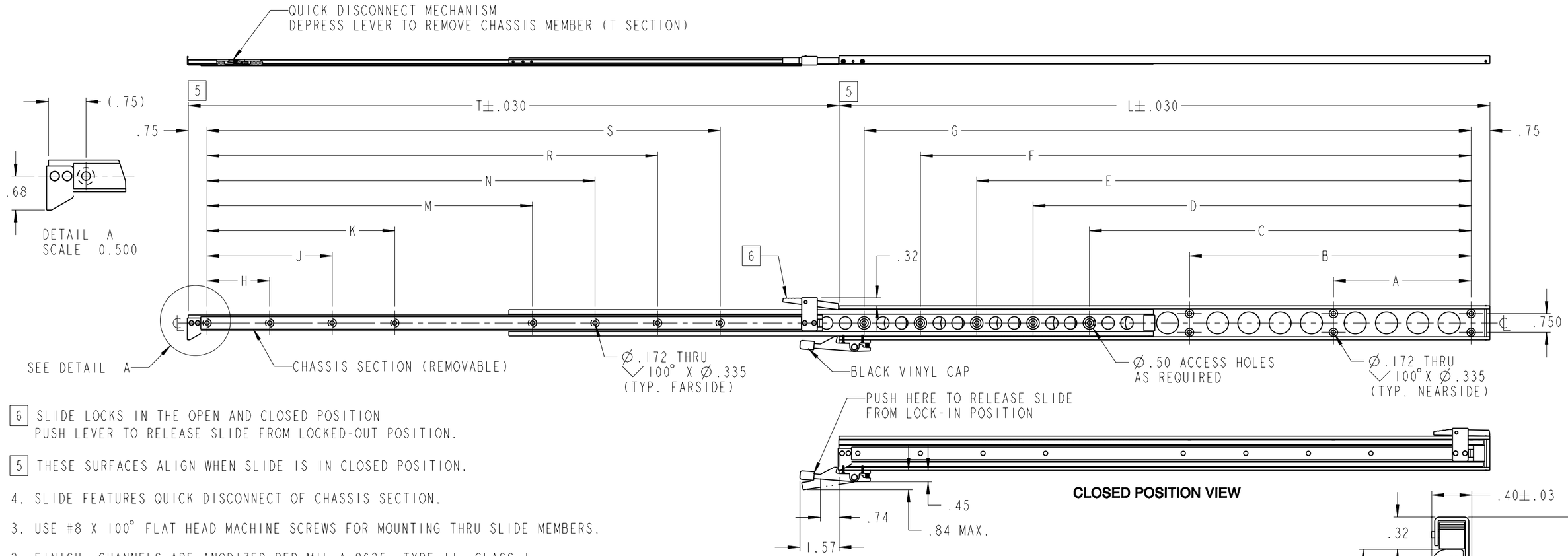

CLOSED POSITION VIEW

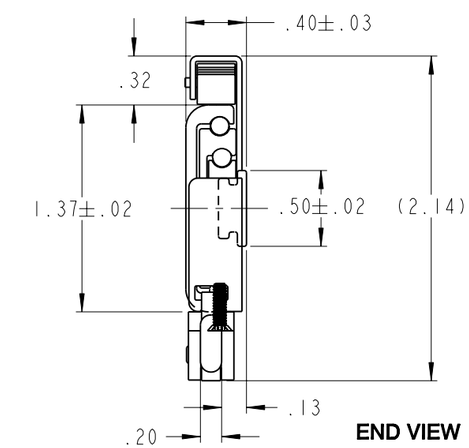

END VIEW

6 SLIDE LOCKS IN THE OPEN AND CLOSED POSITION
PUSH LEVER TO RELEASE SLIDE FROM LOCKED-OUT POSITION.

5 THESE SURFACES ALIGN WHEN SLIDE IS IN CLOSED POSITION.

4. SLIDE FEATURES QUICK DISCONNECT OF CHASSIS SECTION.

3. USE #8 X 100° FLAT HEAD MACHINE SCREWS FOR MOUNTING THRU SLIDE MEMBERS.

2. FINISH: CHANNELS ARE ANODIZED PER MIL-A-8625, TYPE II, CLASS I.
CRES PARTS PASSIVATED PER SAE-AMS-2700.

1. MATERIAL: CHANNELS ARE FABRICATED FROM HIGH STRENGTH ALUMINUM ALLOYS WITH TENSILE STRENGTH OF 35,000 PSI MIN. (PER ASTM B221). COMPONENT PARTS ARE STAINLESS STEEL AND HIGH STRENGTH ALUMINUM. BALL BEARINGS ARE 440 CRES.

7. ORDERING INFORMATION:
129TLLC-XX-P (A PAIR OF SLIDES)
129TLLC-XX-L (LEFT HAND SHOWN)
129TLLC-XX-R (RIGHT HAND OPPOSITE)
XX: LENGTH OF SLIDE

SERIES - LENGTH	SLIDE LENGTH	SLIDE TRAVEL	MOUNTING HOLE PATTERN														LOAD RATING	SLIDE WEIGHT
			CABINET SECTION							CHASSIS SECTION								
PART NO.	L	T	A	B	C	D	E	F	G	H	J	K	M	N	R	S	PER PAIR	
129TLLC-6	6.00	6.00	-	-	2.000	-	-	-	4.250	-	-	-	-	-	-	3.500	105 LBS	.395 LBS
129TLLC-7	7.00	7.00	-	-	3.000	-	-	-	5.250	2.500	-	-	-	-	-	4.500	105 LBS	.415 LBS
129TLLC-8	8.00	8.00	3.000	-	4.000	-	-	-	6.250	2.750	-	-	-	-	-	5.500	105 LBS	.445 LBS
129TLLC-9	9.00	9.00	3.000	-	5.000	-	-	-	7.250	3.250	-	-	-	-	-	6.500	105 LBS	.475 LBS
129TLLC-10	10.00	10.00	4.000	-	6.000	-	-	-	8.250	3.250	-	-	-	-	-	6.500	110 LBS	.505 LBS
129TLLC-11	11.00	11.00	4.000	-	7.000	-	-	-	9.250	2.500	-	-	6.000	-	-	8.500	115 LBS	.535 LBS
129TLLC-12	12.00	12.00	4.000	-	8.000	-	-	-	10.250	2.500	-	-	6.000	-	-	8.500	120 LBS	.555 LBS
129TLLC-13	13.00	13.00	5.500	-	9.000	-	-	-	11.250	2.500	-	-	6.000	-	-	8.500	120 LBS	.605 LBS
129TLLC-14	14.00	14.00	5.500	-	10.000	-	-	-	12.250	2.500	-	5.000	9.000	-	-	11.500	115 LBS	.635 LBS
129TLLC-15	15.00	15.00	5.500	-	11.000	-	-	-	13.250	2.500	-	5.000	9.000	-	-	11.500	115 LBS	.685 LBS
129TLLC-16	16.00	16.00	5.500	-	7.500	9.750	12.000	-	14.250	2.500	-	5.000	9.000	-	-	11.500	115 LBS	.735 LBS
129TLLC-17	17.00	17.00	5.500	-	8.500	10.750	13.000	-	15.250	2.500	-	5.000	9.000	-	-	11.500	115 LBS	.785 LBS
129TLLC-18	18.00	18.00	5.500	-	9.500	11.750	14.000	-	16.250	2.500	-	5.000	8.500	11.000	-	13.500	110 LBS	.815 LBS
129TLLC-19	19.00	19.00	5.500	-	10.500	12.750	15.000	-	17.250	2.500	-	5.000	8.500	11.000	-	13.500	110 LBS	.845 LBS
129TLLC-20	20.00	20.00	5.500	-	11.500	13.750	16.000	-	18.250	2.500	-	5.000	8.500	11.000	-	13.500	100 LBS	.875 LBS
129TLLC-21	21.00	21.00	5.500	-	12.500	14.750	17.000	-	19.250	2.500	5.000	7.500	11.500	14.000	-	16.500	100 LBS	.975 LBS
129TLLC-22	22.00	22.00	5.500	-	13.500	15.750	18.000	-	20.250	2.500	5.000	7.500	11.500	14.000	-	16.500	100 LBS	1.035 LBS
129TLLC-23	23.00	23.00	5.500	-	12.250	14.500	16.750	19.000	21.250	2.500	5.000	7.500	11.000	13.500	16.000	18.500	87 LBS	1.095 LBS
129TLLC-24	24.00	24.00	5.500	-	13.250	15.500	17.750	20.000	22.250	2.500	5.000	7.500	11.000	13.500	16.000	18.500	85 LBS	1.135 LBS
129TLLC-25	25.00	25.00	5.500	11.250	14.250	16.500	18.750	21.000	23.250	2.500	5.000	7.500	13.000	15.500	18.000	20.500	80 LBS	1.175 LBS
129TLLC-26	26.00	26.00	5.500	11.250	15.250	17.500	19.750	22.000	24.250	2.500	5.000	7.500	13.000	15.500	18.000	20.500	80 LBS	1.215 LBS

JONATHAN® Engineered Solutions

Irvine Technology Center
410 Exchange, Suite 200
Irvine, CA 92602
Tel. (714) 665-4400
Fax: (714) 368-7002
Website: www.jonathanengr.com
Engineer - Production - Integration/ Subassembly - Logistics
United States - Mexico - China - Taiwan

TOLERANCES UNLESS OTHERWISE NOTED			
.XX	.XXX	ANGLES	HOLES
± .01	± .005	± 1°	± .005

PART NUMBER : 129TLLC

DATE : 12/17/12

DESCRIPTION :

ALUMINUM SLIDE
SERIES 129TLLC
LOAD RATING : 80-105

SHEET 1 OF 1

COPYRIGHT © 2012 JONATHAN ENGINEERED SOLUTIONS