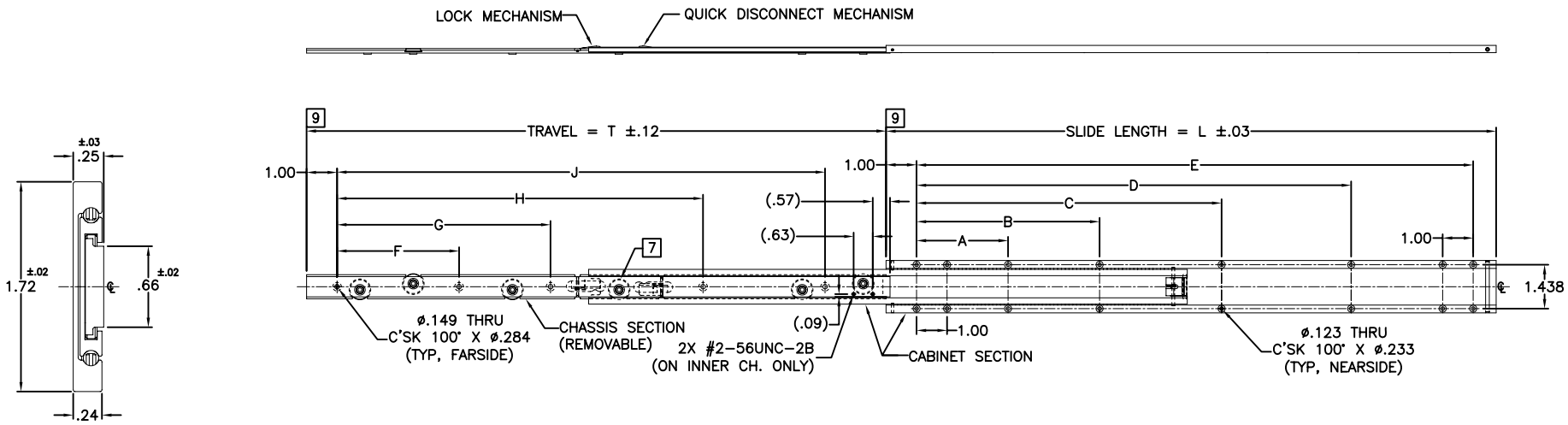

PART NO.	SLIDE LENGTH	SLIDE TRAVEL	CABINET SECTION					CHASSIS SECTION				LOAD RATING — PER PAIR
SERIES – LENGTH	L	T	A	B	C	D	E	F	G	H	J	
250QD–10	10	9	2.000	–	–	5.250	8.250	2.000	–	–	6.500	110 lbs
250QD–11	11	10	2.000	–	–	6.250	9.250	2.000	–	–	7.500	105 lbs
250QD–12	12	11	2.000	–	–	6.250	10.250	2.000	3.000	–	8.500	100 lbs
250QD–13	13	12	3.000	–	–	7.250	11.250	2.000	3.000	–	9.500	100 lbs
250QD–14	14	13	3.000	–	–	7.250	12.250	2.000	4.000	–	10.500	95 lbs
250QD–15	15	14	3.000	–	–	8.250	13.250	2.000	4.000	–	11.500	95 lbs
250QD–16	16	15	4.000	8.000	–	11.250	14.250	3.000	5.000	10.000	12.500	90 lbs
250QD–17	17	16	4.000	8.000	–	12.250	15.250	3.000	5.000	11.000	13.500	90 lbs
250QD–18	18	17	5.000	10.000	–	13.250	16.250	4.000	6.000	11.000	14.500	85 lbs
250QD–19	19	18	5.000	10.000	–	14.250	17.250	4.000	6.000	12.000	15.500	85 lbs
250QD–20	20	19	3.000	6.000	10.000	14.250	18.250	4.000	7.000	12.000	16.500	80 lbs
250QD–21	21	20	3.000	6.000	10.000	15.250	19.250	4.000	7.000	13.000	17.500	80 lbs
250QD–22	22	21	3.000	7.000	12.000	16.250	20.250	5.000	8.000	13.000	18.500	70 lbs
250QD–23	23	22	3.000	7.000	12.000	17.250	21.250	5.000	8.000	14.000	19.500	70 lbs
250QD–24	24	23	3.000	7.000	12.000	17.250	22.250	6.000	9.000	14.000	20.500	65 lbs
250QD–25	25	24	3.000	7.000	12.000	18.250	23.250	6.000	9.000	15.000	21.500	60 lbs
250QD–26	26	25	4.000	8.000	14.000	19.250	24.250	6.000	10.000	16.000	22.500	55 lbs
250QD–27	27	26	4.000	8.000	14.000	20.250	25.250	6.000	10.000	17.000	23.500	50 lbs
250QD–28	28	27	4.000	8.000	14.000	20.250	26.250	6.000	11.000	18.000	24.500	45 lbs

9 THESE SURFACES ALIGN WHEN SLIDE IS IN THE CLOSED POSITION.

8. CABINET SECTION AND CHASSIS SECTION MAY BE PURCHASED SEPARATELY AND ARE INTERCHANGEABLE.

7 AMOUNT AND LOCATION OF ROLLERS TO BE DETERMINED BY JONATHAN ENGINEERING SOLUTIONS.

6. USE #6 100 DEG. FLAT HEAD MACHINE SCREW FOR MOUNTING THRU INNER MEMBER.

5. USE #4 100 DEG. FLAT HEAD MACHINE SCREW FOR MOUNTING THRU OUTER MEMBER.

4. SLIDE LOCKS IN OPEN POSITION AND IS PROVIDED WITH QUICK DISCONNECT OF CHASSIS SECTION.

3. LEFT HAND SHOWN, RIGHT HAND OPPOSITE.

2. FINISH: CHANNELS ARE ANODIZED PER MIL–A–8625 TYPE II, CLASS 1.
CRES PARTS PASSIVATED PER SAE–AMS–QQ–P–35.

1. MATERIAL: CHANNELS ARE FABRICATED FROM HIGH STRENGTH ALUMINUM ALLOYS WITH TENSILE STRENGTH OF 35,000 PSI MIN. (PER ASTM B221)
COMPONENT PARTS ARE 302 OR 303 CRES AND HIGH STRENGTH ALUMINUM ALLOYS.
BALL BEARING ARE 440 CRES.

JONATHAN® Engineered Solutions

Irvine Technology Center
410 Exchange, Suite 200
Irvine, CA 92602
Tel. (714) 665-4400
Fax: (714) 368-7002
Website: www.jonathanengr.com
Engineer - Production - Integration/ Subassembly - Logistics
United States - Mexico - China - Taiwan

TOLERANCES UNLESS OTHERWISE NOTED				PART NUMBER :	DESCRIPTION :
				250QD	ALUMINUM 250QD LOAD RATING: 45-110 lbs
.XX	.XXX	ANGLE	HOLES	DATE :	
± .01	± .005	± 1°	± .005	06/01/09	
SHEET 1 OF 1					

COPYRIGHT © 2009 JONATHAN ENGINEERED SOLUTIONS